TE-H

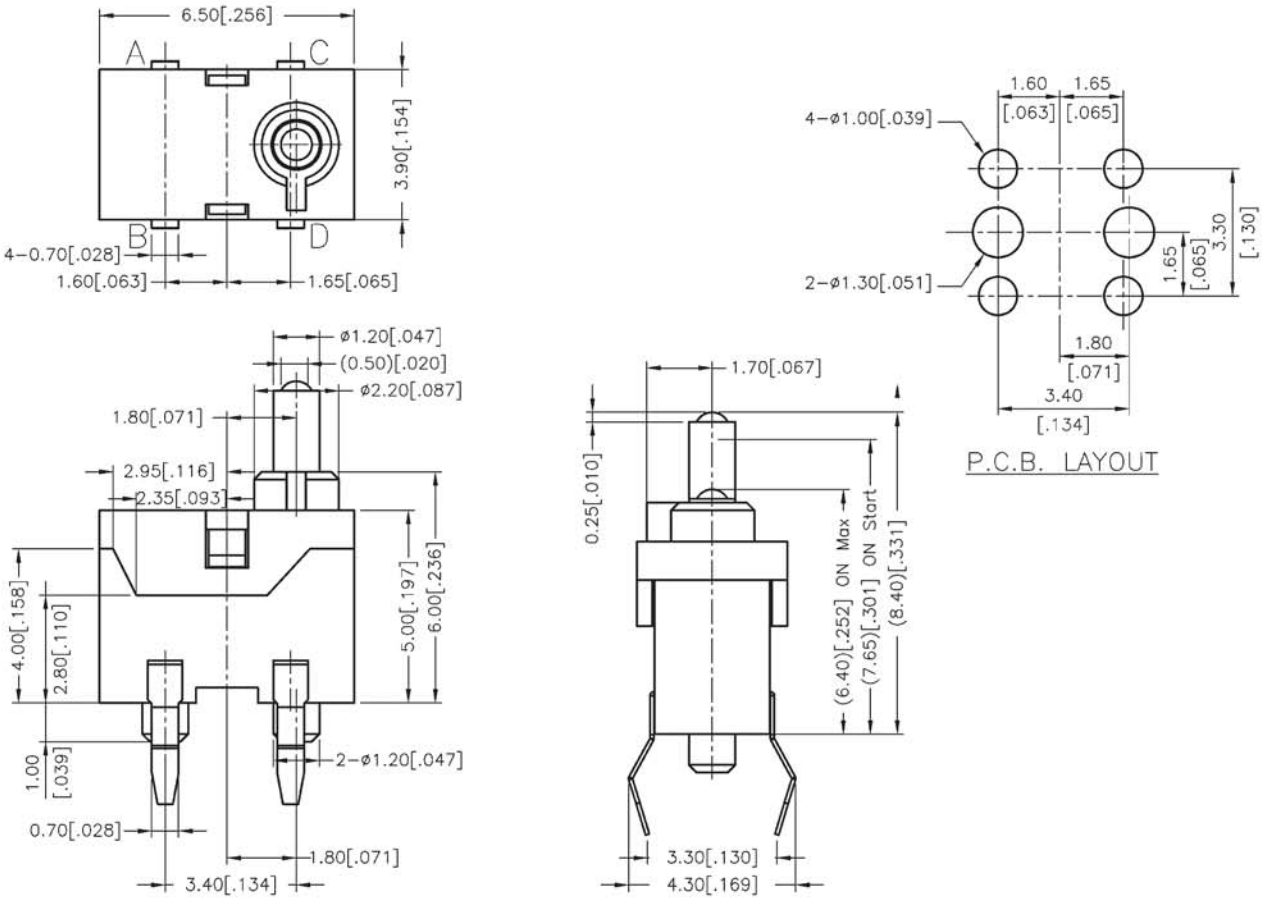

General Tolerance: ±02mm(±0.008")