DTSMW-64.65.67.69

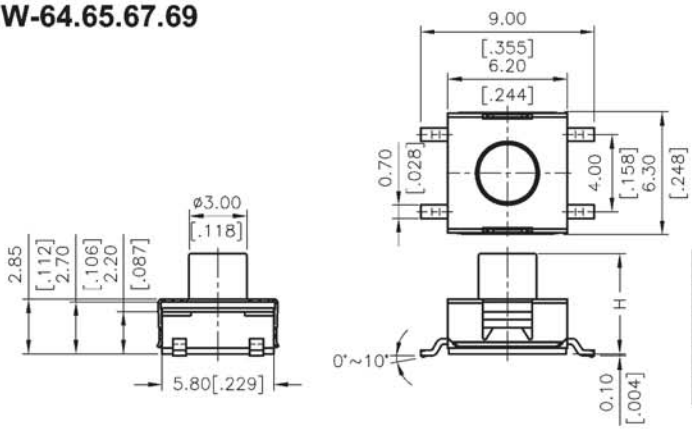

DTSMW-69	3.80[.150]
DTSMW-67	5.20[.205]
DTSMW-65	3.50[.138]
DTSMW-64	4.50[.177]
PART NO.	H

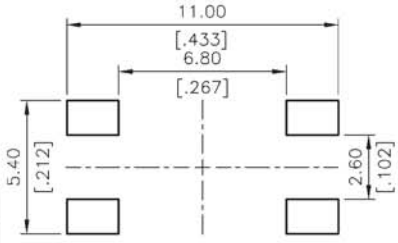

P.C.B LAYOUT

General Tolerance: ±02mm(±0.008")